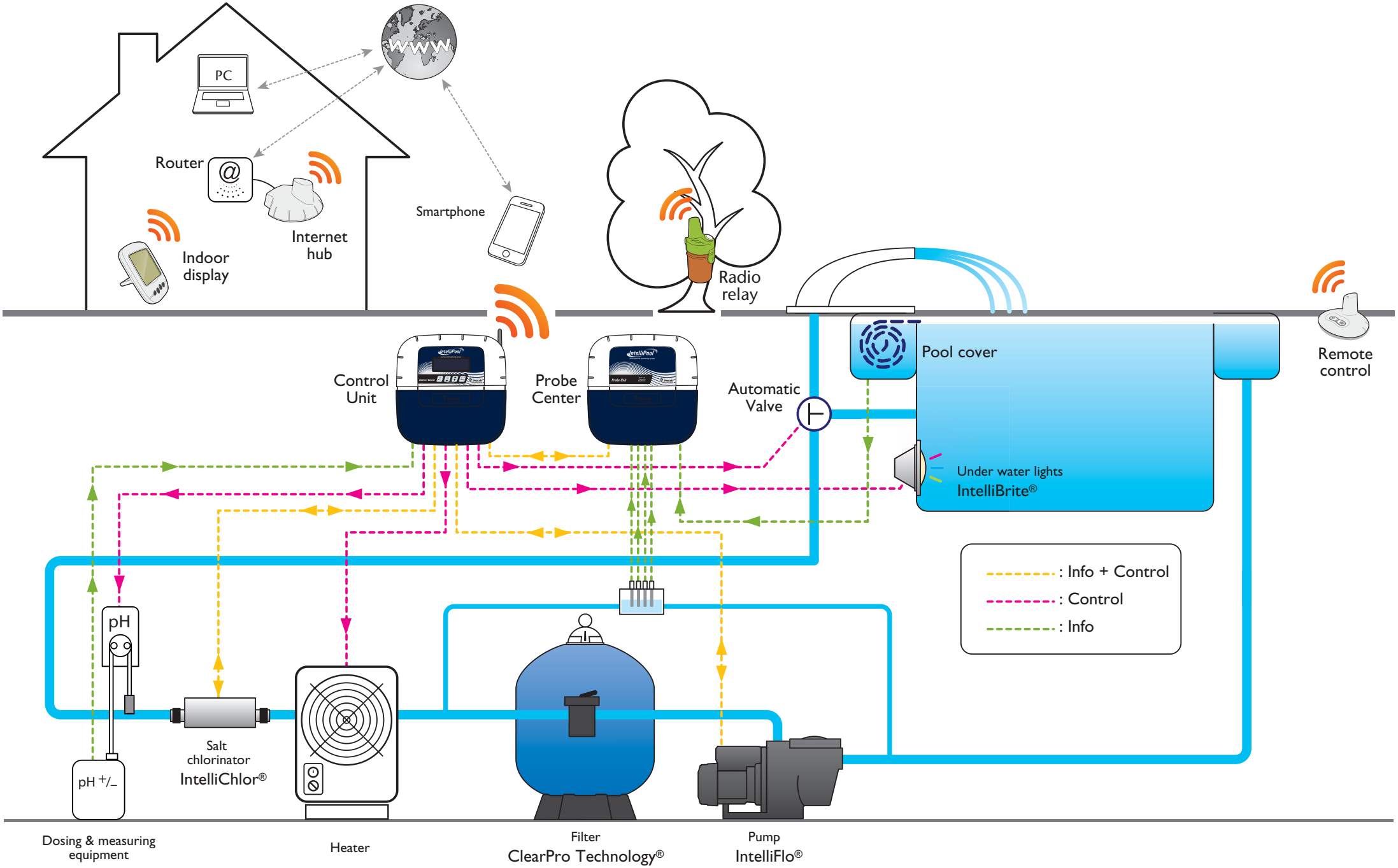
PC
Router
Internet hub
Indoor display
Smartphone
Radio relay
Remote control
Control Unit
Probe Center
Automatic Valve
Pool cover
Under water lights
IntelliBrite®
: Info + Control
: Control
: Info
pH
pH +/–
Salt chlorinator
IntelliChlor®
Dosing & measuring equipment
Heater
Filter
ClearPro Technology®
Pump
IntelliFlo®